Version: 1.0

TECHNICAL SPECIFICATION

MODEL NO. : ED050SU3

The content of this information is subject to be changed without notice.
Please contact EIH or its agent for further information

☐Customer's Confirmation

Customer _____

Date _____

By _____

☐EIH's Confirmation

Confirmed By Frank Shan

Prepared By 吳采君

The information contained herein is the exclusive property of E Ink Holdings Inc. and shall not be distributed, reproduced, or disclosed in whole or in part without prior written permission of E Ink Holdings In c.

Revision History

Rev.	Issued Date	Revised Contents
1.0	September.23.2010	New

The information contained herein is the exclusive property of E Ink Holdings Inc. and shall not be distributed, reproduced, or disclosed in whole or in part without prior written permission of E Ink Holdings In c.

TECHNICAL SPECIFICATION

CONTENTS

NO.	ITEM	PAGE
-	Cover	1
-	Revision History	2
-	Contents	3
1	Application	4
2	Features	4
3	Mechanical Specifications	4
4	Mechanical Drawing of EPD module	5
5	Input/Output Terminals	6
6	Electrical Characteristics	7
7	Power on Sequence	11
8	Discharge time Sequence	13
9	Optical Characteristics	14
10	Handling, Safety and Environment Requirements	16
11	Reliability test	17
12	Bar Code Definition	18
13	Border Definition	20
14	Block Diagram	20
15	Packing	21

The information contained herein is the exclusive property of E Ink Holdings Inc. and shall not be distributed, reproduced, or disclosed in whole or in part without prior written permission of E Ink Holdings In c.

1. Application

The display is a TFT active matrix electrophoretic display, with associated interface and control logic, and a reference system design.

The 5”active area contains 800×600 pixels, the display is capable to display images at 2-16 gray levels (1-4 bits) depending on the display controller and the associated waveform file used .(Note 1-1)

Note 1-1
The standard waveform provided by EIH are 4bits waveform for ISIS and broadsheet, 3 bits waveform for broadsheet & 8track,2 bits waveform for PVI-6001A.

2. Features

- High contrast TFT electrophoretic
- 800x600 display
- High reflectance
- Ultra wide viewing angle
- Ultra low power consumption
- Pure reflective mode
- Bi-stable
- Commercial temperature range
- Landscape, portrait mode
- Antiglare hard-coated front-surface

3. Mechanical Specifications

Parameter	Specifications	Unit	Remark
Screen Size	5	Inch	
Display Resolution	800 (H) ×600(V)	Pixel	
Active Area	101.6 (H)×76.2 (V)	mm	
Pixel Pitch	0.127(H)x0.127(V)	mm	
Pixel Configuration	Rectangle		
Outline Dimension	113.70(H) ×89.20(V) ×1.18(D)	mm	
Module Weight	22±2	g	

The information contained herein is the exclusive property of E Ink Holdings Inc. and shall not be distributed, reproduced, or disclosed in whole or in part without prior written permission of E Ink Holdings In c.

4. Mechanical Drawing of EPD Module

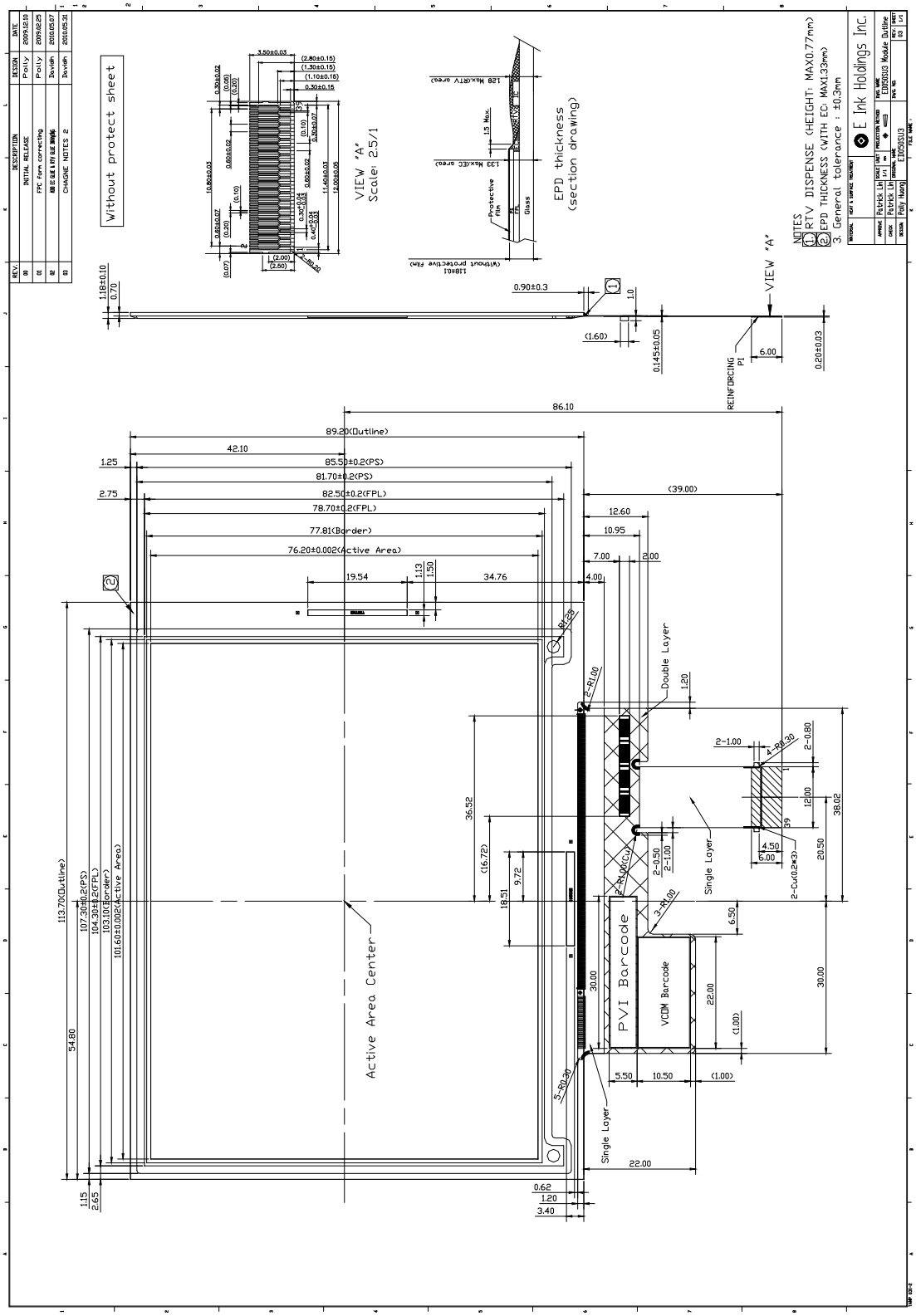

The information contained herein is the exclusive property of E Ink Holdings Inc. and shall not be distributed, reproduced, or disclosed in whole or in part without prior written permission of E Ink Holdings In c.

5. Input/Output Terminals

5-1)Pinout List

Pin #	Signal	Description
1	VNEG	Negative power supply source driver
2	VPOS	Positive power supply source driver
3	VSS	Ground
4	VDD	Digital power supply drivers
5	CKH	Clock source driver
6	LEH	Latch enable source driver
7	OEH	Output enable source driver
8	NC	NO Connection
9	NC	NO Connection
10	NC	NO Connection
11	STH	Start pulse source driver
12	D0	Data signal source driver
13	D1	Data signal source driver
14	D2	Data signal source driver
15	D3	Data signal source driver
16	D4	Data signal source driver
17	D5	Data signal source driver
18	D6	Data signal source driver
19	D7	Data signal source driver
20	NC	NO Connection
21	NC	NO Connection
22	VCOM	Common voltage
23	VGG	Positive power supply gate driver
24	VEE	Negative power supply gate driver
25	NC	NO Connection
26	NC	NO Connection
27	NC	NO Connection driver
28	MODE1	Output mode selection gate driver
29	NC	NO Connection
30	NC	NO Connection
31	NC	NO Connection
32	STV	Start pulse gate driver
33	CKV	Clock gate driver
34	BORDER	Border connection
35	NC	NO Connection
36	NC	NO Connection
37	NC	NO Connection
38	NC	NO Connection
39	VSS	Ground

The information contained herein is the exclusive property of E Ink Holdings Inc. and shall not be distributed, reproduced, or disclosed in whole or in part without prior written permission of E Ink Holdings In c.

6.Electrical Characteristics

6-1) Panel interface description

This panel is driven by Boardsheet display controller ASIC. See control product specification for details.

6-2) Absolute maximum rating

Parameter	Symbol	Rating	Unit
Logic Supply Voltage	VDD	-0.3 to +7	V
Positive Supply Voltage	V_{POS}	-0.3 to +18	V
Negative Supply Voltage	V_{NEG}	+0.3 to -18	V
Max .Drive Voltage Range	V_{POS} - V_{NEG}	36	V
Supply Voltage	VGG	-0.3 to +45	V
Supply Voltage	VEE	-25.0 to +0.3	V
Supply Range	VGG-VEE	-0.3 to +45	V
Operating Temp. Range	TOTR	0 to +50	℃
Storage Temperature	TSTG	-25 to +70	℃

6-3) Panel DC characteristics

Parameter	**Symbol**	**Conditions**	**Min**	**Typ**	**Max**	**Unit**
Signal ground	V_{SS}		-	0	-	V
Logic Voltage supply	V_{DD}		3.0	3.3	3.6	V
	I_{VDD}	V_{DD}=3.3V	-	1.0	3.0	mA
Gate Negative supply	V_{EE}		-21	-20	-19	V
	I_{EE}	V_{EE} =-20V	-	0.5	1.5	mA
Gate Positive supply	V_{GG}		21	22	23	V
	I_{GG}	V_{GG} = 22V	-	0.5	1.5	mA
Source Negative supply	V_{NEG}		-15.4	-15	-14.6	V
	I_{NEG}	V_{NEG} = -15V	-	15.1	30.2	mA
Source Positive supply	V_{POS}		14.6	15	15.4	V
	I_{POS}	V_{POS} = 15V	-	14.6	29.2	mA
Border supply	V_{Border}	V_{POS} = 15V	14.6	15	15.4	V
		V_{NEG} = -15V	-15.4	-15	-14.6	V
Asymmetry source	V_{Asym}	V_{POS}+V_{NEG}	-800	0	800	mV
Common voltage	V_{COM}		-2.5	Adjusted	-1.0	V
	I_{COM}		-	0.1	-	mA
Panel power consumption	P		-	470	970	mW
Standby power panel	P_{STBY}		-	-	0.4	mW
Operating temperature			0	-	50	℃
Storage temperature			-25	-	70	℃
Image update time at 25℃			-	600	-	ms

The information contained herein is the exclusive property of E Ink Holdings Inc. and shall not be distributed, reproduced, or disclosed in whole or in part without prior written permission of E Ink Holdings In c.

- The Typical power consumption is measured using 85Hz WF with following pattern transition: from horizontal 4 gray scale pattern to vertical 4 gray scale pattern.(Note 6-1)
- The standby power is the consumed power when the panel controller is in standby mode.
- The listed electrical/optical characteristics are only guaranteed under the controller & waveform provided by EIH.
- Vcom is recommended to be set in the range of assigned value ± 0.1V
- The maximum I_{COM} inrush current is about 800 mA

Note 6-1

The Typical power consumption

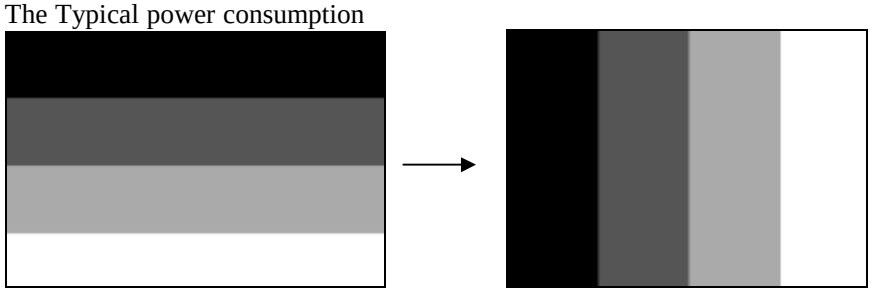

The information contained herein is the exclusive property of E Ink Holdings Inc. and shall not be distributed, reproduced, or disclosed in whole or in part without prior written permission of E Ink Holdings Inc.

6-4)Panel AC characteristics

VDD=3.0V to 3.6V, unless otherwise specified.

Parameter	Symbol	Min.	Typ.	Max.	Unit
Clock frequency	fckv	-	-	200	kHz
Minimum “L” clock pulse width	twL	0.5	-	-	us
Clock rise time	trckv	-	-	100	ns
Clock fall time	tfckv	-	-	100	ns
Data setup time	tSU	100	-	-	ns
Data hold time	tH	100	-	-	ns
Pulse rise time	trspv	-	-	100	ns
Pulse fall time	tfspv	-	-	100	ns
Clock CKH cycle time	tcy	16.7	-	--	ns
D0 .. D7 setup time	tsu	8	-	-	ns
D0 .. D7 hold time	th	8	-	-	ns
STH setup time	tstls	8	-	-	ns
STH hold time	tstlh	8	-	-	ns
LEH on delay time	tLEdly	40	-	-	ns
LEH high-level pulse width	tLEw	40	-	-	ns
LEH off delay time	tLEoff	200	-	-	ns
Output setting time to +/- 30mV(C_{load}=200pF)	tout	-	-	12	us

CLOCK & DATA TIMING

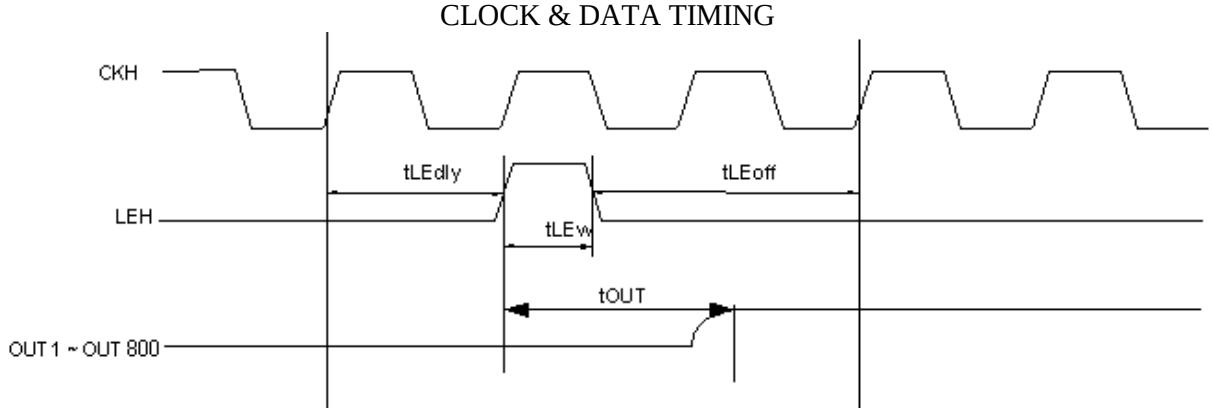

The information contained herein is the exclusive property of E Ink Holdings Inc. and shall not be distributed, reproduced, or disclosed in whole or in part without prior written permission of E Ink Holdings In c.

OUTPUT LATCH CONTROL SIGNALS

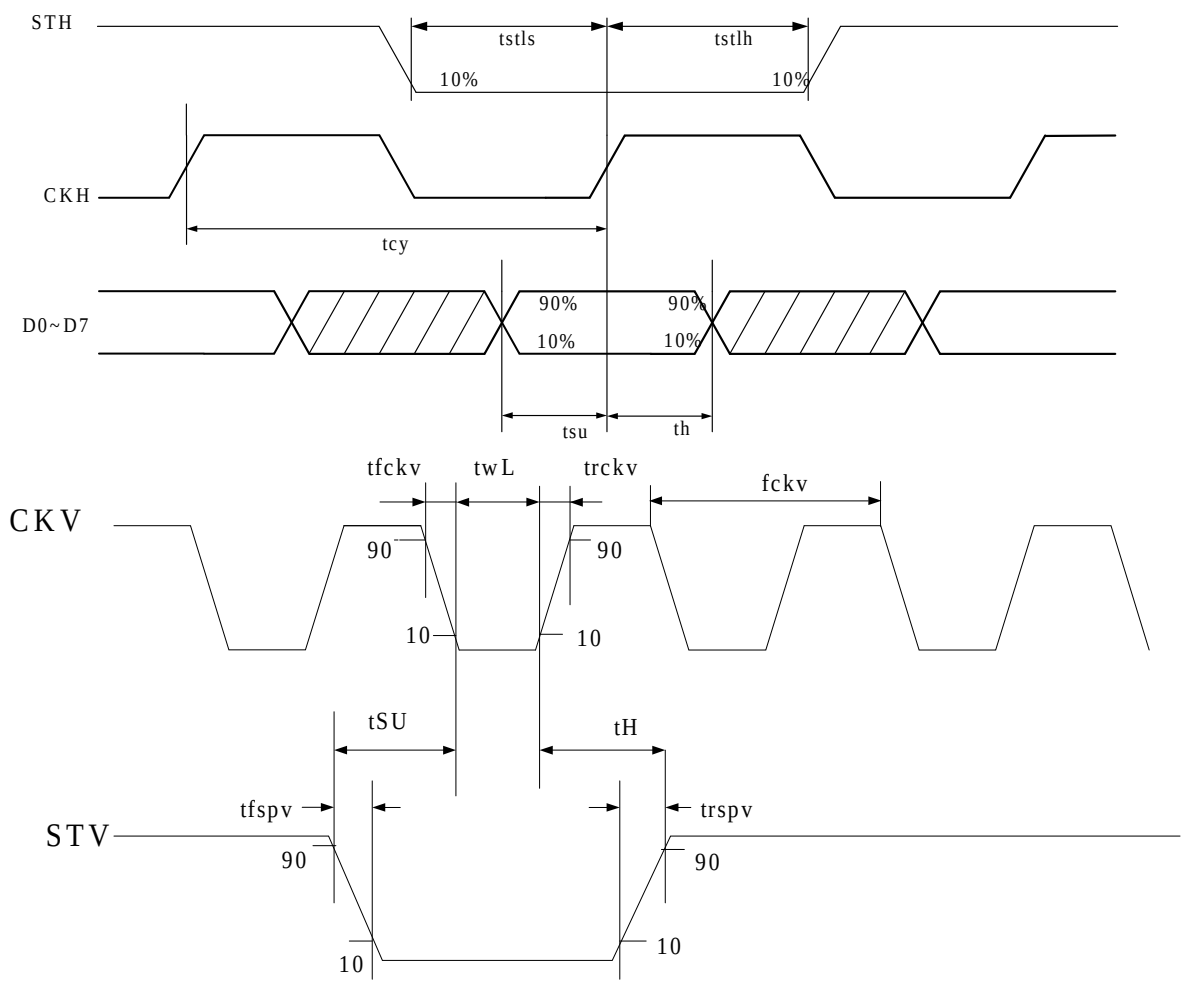

The information contained herein is the exclusive property of E Ink Holdings Inc. and shall not be distributed, reproduced, or disclosed in whole or in part without prior written permission of E Ink Holdings In c.

7.Power on Sequence

Power Rails must be sequenced in the following order ：

1. VSS → VDD → VNEG → VPOS (Source driver) → VCOM

2. VSS → VDD → VEE → VGG (Gate driver)

POWER ON

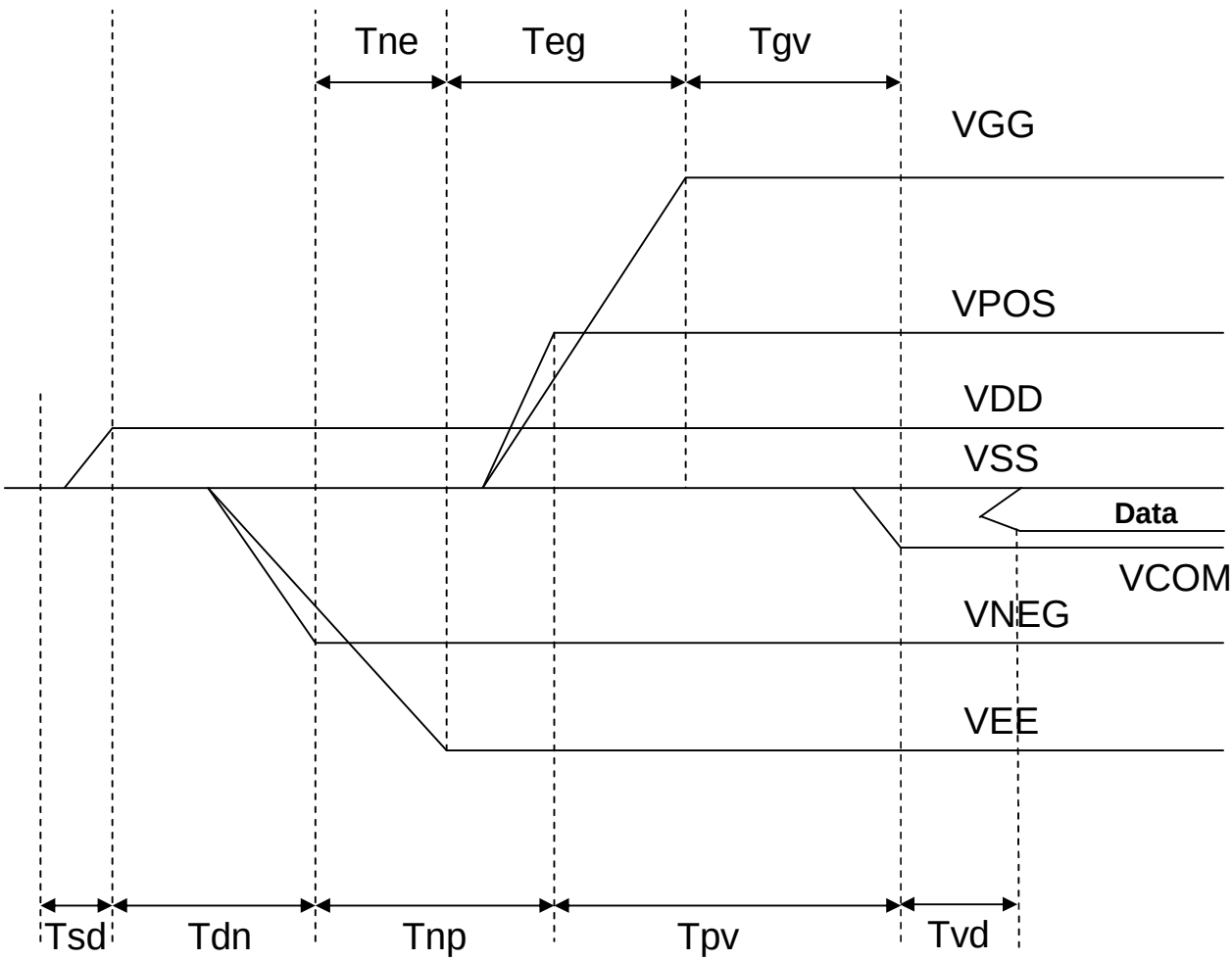

	Min	Max
Tsd	100us	-
Tdn	100us	-
Tnp	1000us	-
Tpv	100us	-
Tvd	100us	-
Tne	0us	-
Teg	1000us	-
Tgv	100us	-

The information contained herein is the exclusive property of E Ink Holdings Inc. and shall not be distributed, reproduced, or disclosed in whole or in part without prior written permission of E Ink Holdings In c.

POWER DOWN

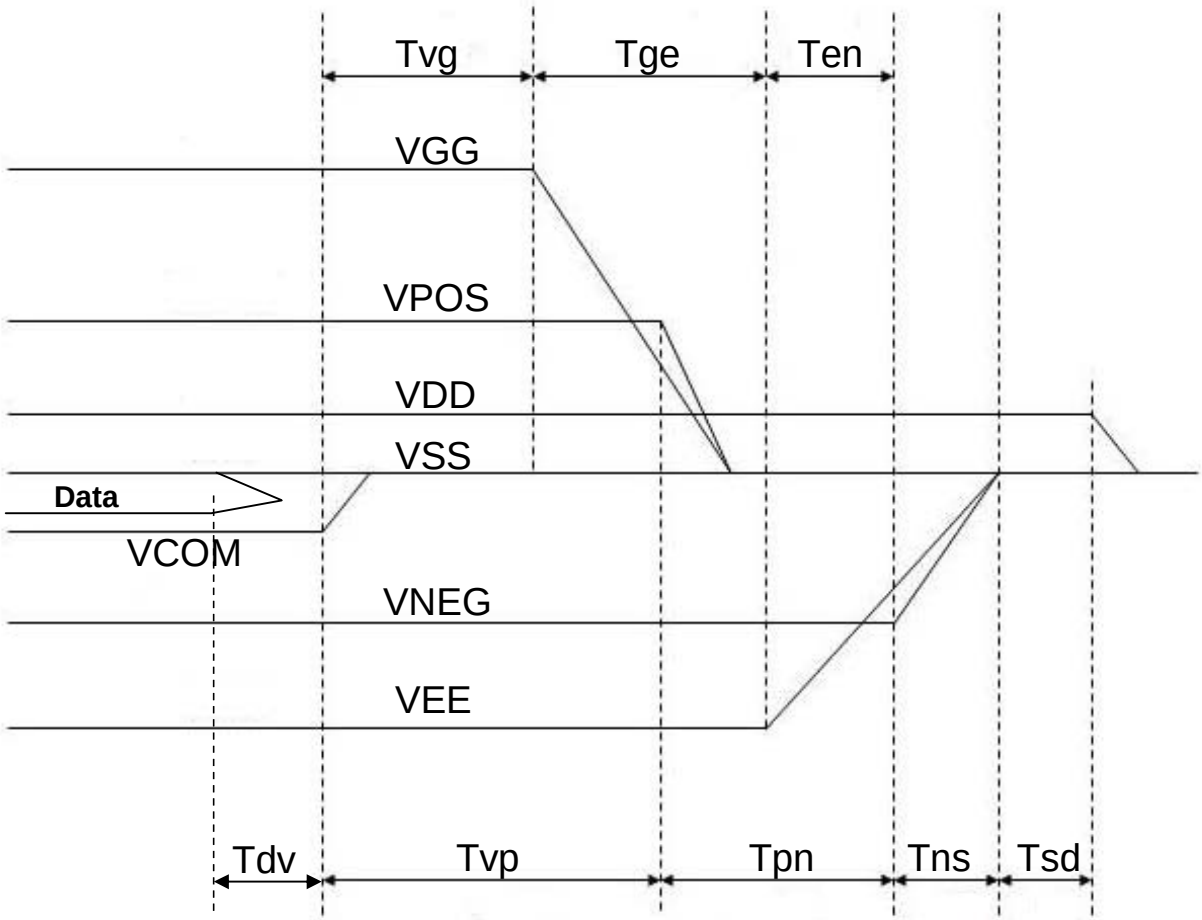

	Min	Max
Tdv	100 μs	-
Tvp	0 μs	-
Tpn	0 μs	-
Tns	-	1000ms
Tsd	100 μs	-
Tvg	0 μs	-
Tge	0 μs	-
Ten	0 μs	-

The information contained herein is the exclusive property of E Ink Holdings Inc. and shall not be distributed, reproduced, or disclosed in whole or in part without prior written permission of E Ink Holdings In c.

8. Discharge time Sequence

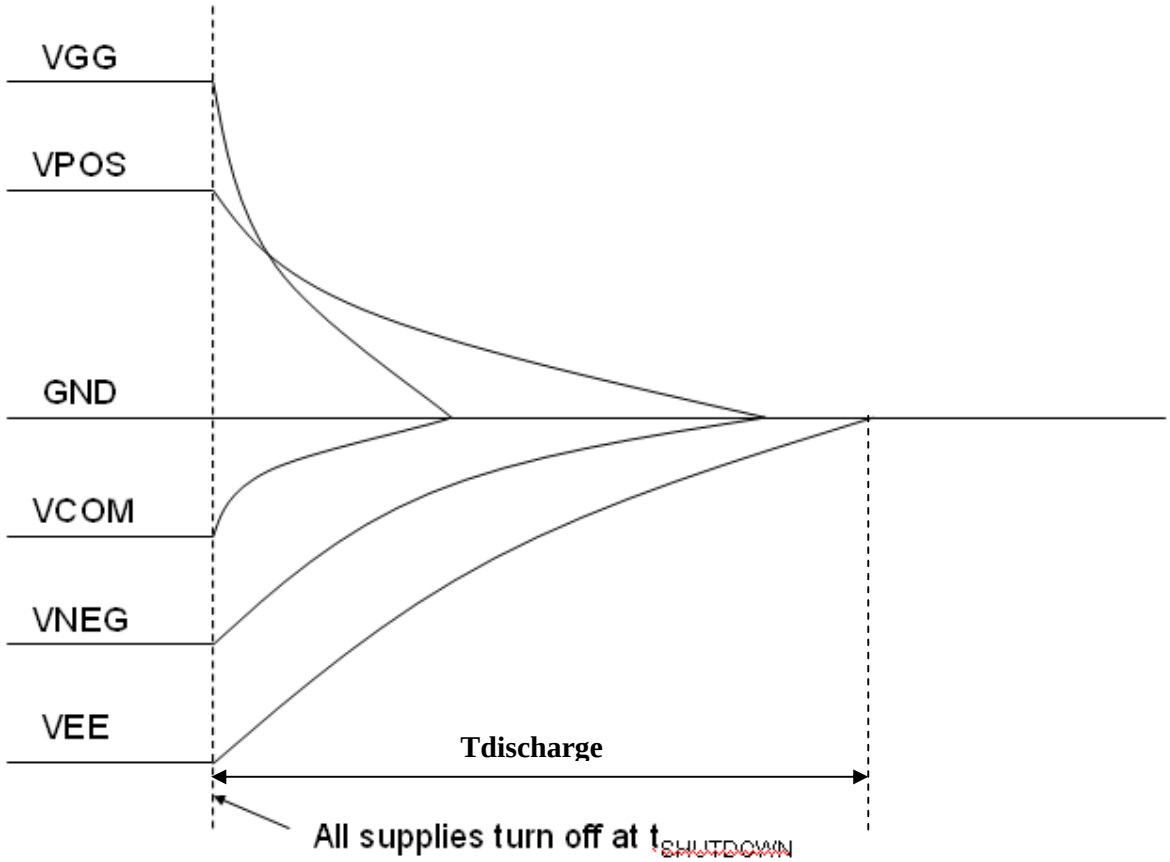

Note8-1：Supply voltages decay through pulldown resistors.
Note8-2：VEE must remain negative of all other supplies during decay period.

8-1) Refresh Rate

The module ED60SC7 is applied at a maximum screen refresh rate of 85Hz.

	Min	Max
Refresh Rate	-	85Hz

The information contained herein is the exclusive property of E Ink Holdings Inc. and shall not be distributed, reproduced, or disclosed in whole or in part without prior written permission of E Ink Holdings In c.

9. Optical characteristics

9-1)Specifications

Measurements are made with that the illumination is under an angle of 45 degrees, the detection is perpendicular unless otherwise specified.

T = 25°C

SYMBOL	PARAMETER	CONDITIONS	MIN	TYP.	MAX	UNIT	Note
R	Reflectance	White	30	35	-	%	Note 8-1
Gn	N_{th} Grey Level	-	-	DS+(WS-DS)×n/(m-1)	-	L*	-
CR	Contrast Ratio	-	10	12	-		-
T_{update}	Update time	2~4-bit mode 1-bit mode		600 250	-	ms ms	-

WS: White state , DS: Dark state, Gray state from Dark to White :DS 、G1、G2…、Gn…、Gm-2、WS

m:4、8、16 when 2、3、4 bits mode

Note 8-1: Luminance meter :Eye – One Pro Spectrophotometer.

9-2)Definition of contrast ratio

The contrast ratio (CR) is the ratio between the reflectance in a fu ll white area (Rl) and the reflectance in a dark area (Rd):

CR = Rl/Rd

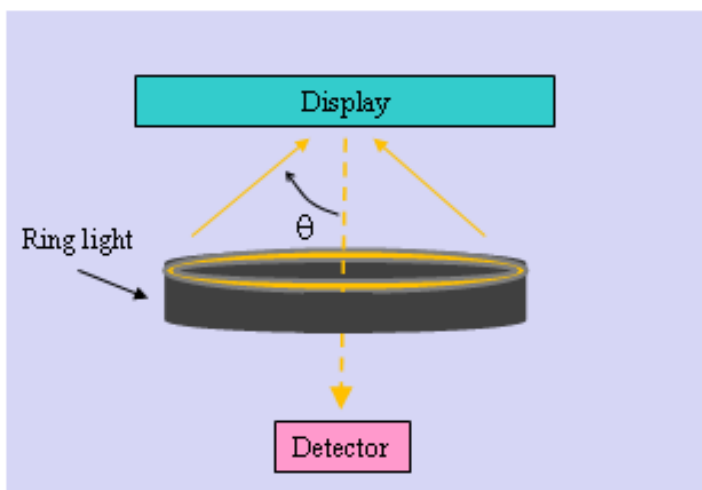

The information contained herein is the exclusive property of E Ink Holdings Inc. and shall not be distributed, reproduced, or disclosed in whole or in part without prior written permission of E Ink Holdings In c.

9-3)Reflection Ratio

The reflection ratio is expressed as:

R = Reflectance Factor$_{\text{white board}}$ x (L_{center} / $L_{\text{white board}}$)

L_{center} is the luminance measured at center in a white area (R=G=B=1). $L_{\text{white board}}$ is the luminance of a standard white board. Both are measured with equivalent illumination source. The viewing angle shall be no more than 2 degrees.

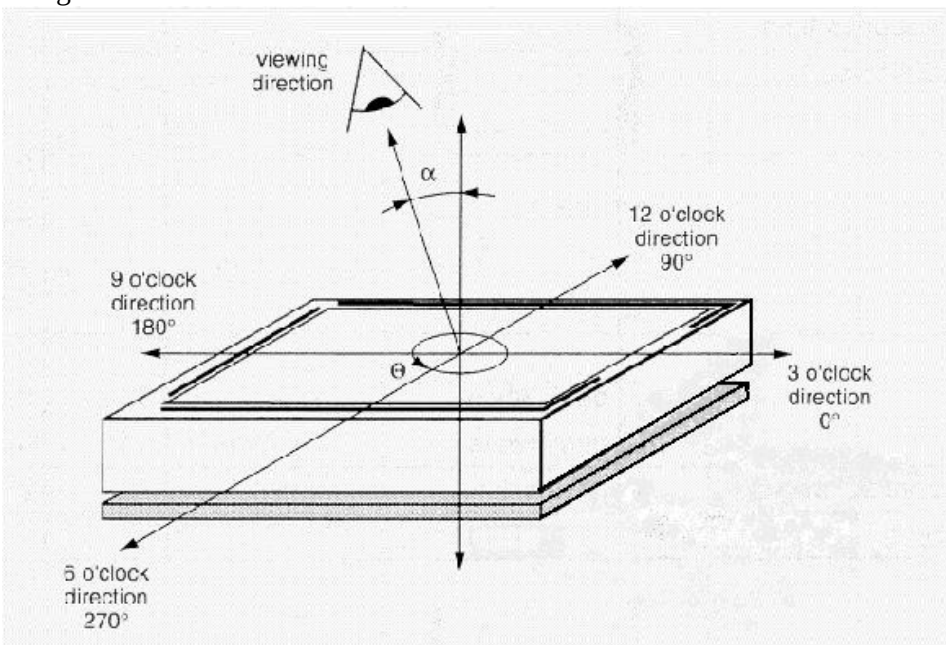

α = declination / θ = azimuth

The information contained herein is the exclusive property of E Ink Holdings Inc. and shall not be distributed, reproduced, or disclosed in whole or in part without prior written permission of E Ink Holdings In c.

10.HANDLING, SAFETY AND ENVIROMENTAL REQUIREMENTS

WARNING
The display glass may break when it is dropped or bumped on a hard surface. Handle with care. Should the display break, do not touch the electrophoretic material. In case of contact with el ectrophoretic material, wash with water and soap.

CAUTION
The display module should not be exposed to harmful gases, such as acid and alkali gases, which corrode electronic components.
Disassembling the display module can cause permanent damage and inval idate the warranty agreements.

Observe general precautions that are common to handling delicate electronic components. The glass can break and front surfaces can easily be damaged. Moreover the display is sensitive to static electricity and other rough environmental conditions.

Data sheet status	
Product specification	This data sheet contains final product specifications.
Limiting values	
Limiting values given are in accordance with the Absolute Maximum Rating System (IEC 134). Stress above one or more of the limiting values may cause permanent damage to the device. These are stress ratings only and operation of the device at these or at any other conditions above those given in the Characteristics sections of the specification is not implied. Exposure to limiting values for extended periods may affect device reliability.	
Application information	
Where application information is given, it is advisory and does not form part of the specification.	

The information contained herein is the exclusive property of E Ink Holdings Inc. and shall not be distributed, reproduced, or disclosed in whole or in part without prior written permission of E Ink Holdings In c.

11. Reliability test

	TEST	CONDITION	METHOD
1	High-Temperature Operation	T = +50°C, RH = 30% for 240 hrs	IEC 60 068-2-2Bp
2	Low-Temperature Operation	T = 0°C for 240 hrs	IEC 60 068-2-2Ab
3	High-Temperature Storage	T = +70°C, RH=23% for 240 hrs (Test In White Pattern)	IEC 60 068-2-2Bp
4	Low-Temperature Storage	T = -25°C for 240 hrs (Test In White Pattern)	IEC 60 068-2-1Ab
5	High-Temperature, High-Humidity Operation	T = +40°C, RH = 90% for 168 hrs	IEC 60 068-2-3CA
6	High Temperature, High- Humidity Storage	T = +60℃, RH=80% for 240hrs (Test In White Pattern)	IEC 60 068-2-3CA
7	Temperature Cycle	1 cycle:[-25℃ 30min]→[+70℃ 30 min] :100 cycles (Test In White Pattern)	IEC 60 068-2-14
8	UV exposure Resistance	765 W/m^2 for 168hrs,40℃ (Test In White Pattern)	IEC60 068-2-5Sa
9	Package Vibration	1.04G, Frequency: 10~500Hz Direction: X,Y,Z Duration: 1 hours in each direction	Full packed for shipment
10	Package Drop Impact	Drop from height of 122 cm on concrete surface. Drop sequence: 1 corner, 3 edges, 6 faces One drop for each.	Full packed for shipment
11	Electrostatic Effect (non-operating)	(Machine model)+/- 250V 0Ω, 200pF	IEC 62179, IEC 62180
12	Altitude test Operation	700hPa (= 3000m) 48Hr	
13	Altitude test Storage	260hPa (= 10000m) 48Hr (Test In White Pattern)	
14	Stylus Tapping	POLYACETAL Pen: Top R:0.8mm Load: 200gf Speed: 30 times/Min Total 13,500times,	

Actual EMC level to be measured on customer application

Note : The protective film must be removed before temperature test.

< Criteria >

a. Module should normally work under the normally condition

b. After reliability test, there is no display NG inclu ding line and no image.

c. Stylus Tapping Pass criteria: no glass breakage or damage to microcapsules.

The information contained herein is the exclusive property of E Ink Holdings Inc. and shall not be distributed, reproduced, or disclosed in whole or in part without prior written permission of E Ink Holdings In c.

12. Bar Code definition

E2U	00	4	01	1	I	7	4	00361	A	T
1	2	3	4	2	5	6	2	7	2	8

1-EPD Model Code

EPD Model Code	Part Number
E2U	ED050SU3

2-Internal Control Codes

DO NOT CARE

3-FPL Version Code

FPL Version Code	Platform
3	Eink ver. 2.3
4	Eink ver. V110
5	Eink ver. V110A
6	Eink ver. V220C
7	Eink ver. V250
8	Eink ver. V220E

4-FPL Batch Code

FPL Batch Code	Translation
01-99	001-099
A0-A9	100-109
B0-B9	110-119
. .	. .
Z0-Z9	320-329

5-Year

Year	Translation
F	2005
G	2006
H	2007
I	2008
J	2009
K	2010
. .	. .
Z	2025

The information contained herein is the exclusive property of E Ink Holdings Inc. and shall not be distributed, reproduced, or disclosed in whole or in part without prior written permission of E Ink Holdings In c.

6-Month

Month	Translation
1	Jan
2	Feb
3	Mar
4	Apr
5	May
6	Jun
7	Jul
8	Aug
9	Sep
A	Oct
B	Nov
C	Dec

7-Serial Number

Serial Number
00000-99999

8-Module Manufacturer Code

Module Manufacturer Code	Translation
T	TOC
P	EIH

The information contained herein is the exclusive property of E Ink Holdings Inc. and shall not be distributed, reproduced, or disclosed in whole or in part without prior written permission of E Ink Holdings In c.

13. Border definition

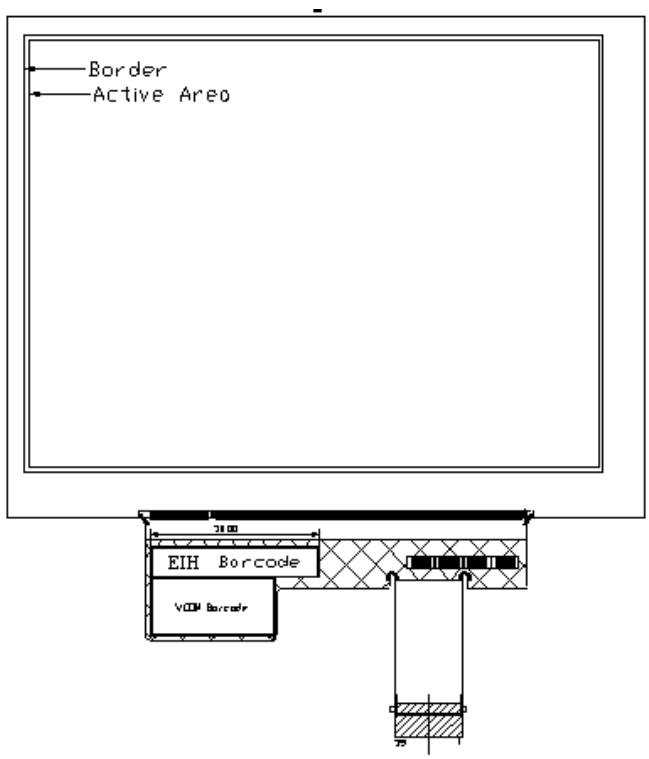

14.Block Diagram

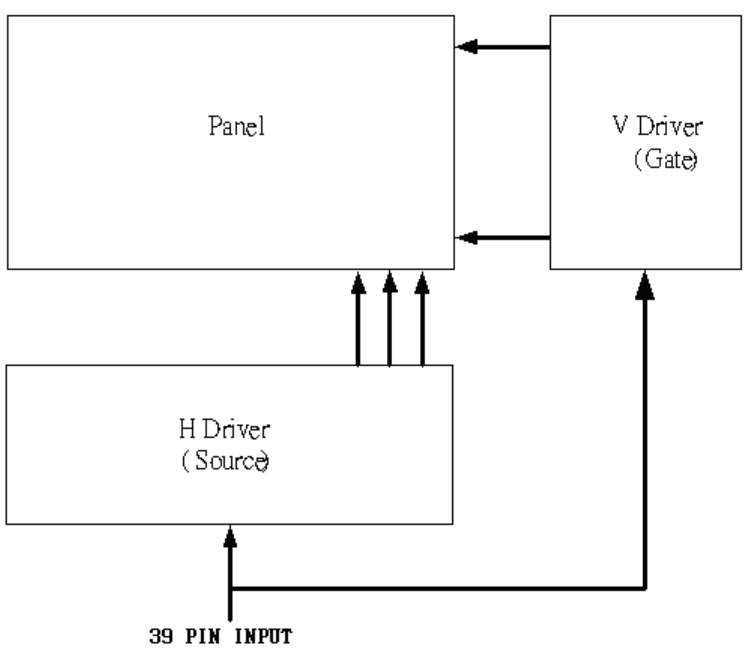

The information contained herein is the exclusive property of E Ink Holdings Inc. and shall not be distributed, reproduced, or disclosed in whole or in part without prior written permission of E Ink Holdings In c.

15.Packing

REV	DESCRIPTION	DESIGN	DATE
01	INITIAL RELEASE	Polly Huang	'10.03.29
02	ADD EASY TAPE	David Hsieh	'10.05.07
03	50-0100093~50-0100096	David Hsieh	'10.10.14

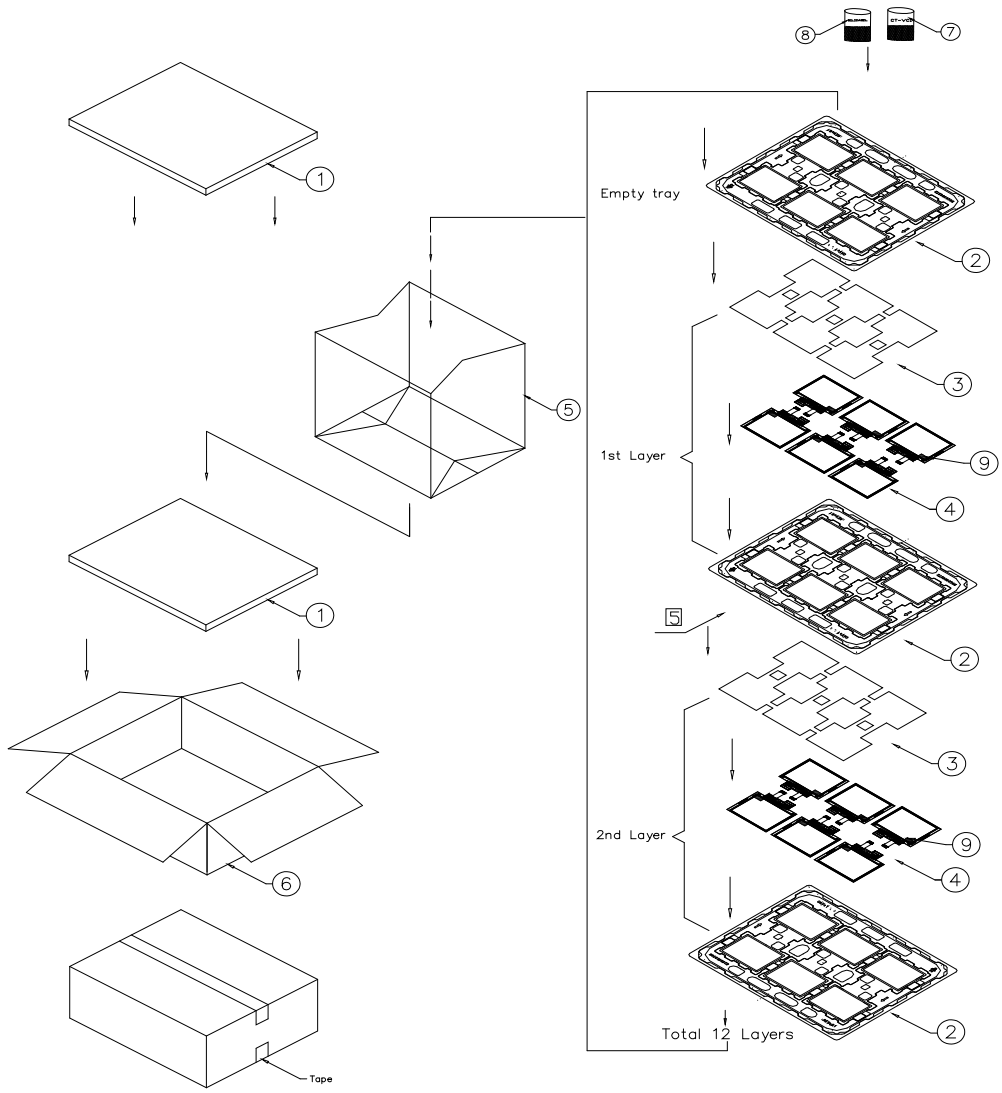

NOTE:
1.One layer include: 1 piece of cushion sheet, 6pcs panel & 1 piece of tray.
2.Q'TY: 72 pcs panel/carton.
3.Dimension: 455*375*190mm
4.Weight: 4.7 KG
5.Make sure tray stacked with 180° rotation. We can check this by lateral side view.

ITEM	PART NO.	DESCRIPTION	QTY	REMARK
9	99-1310114	EASY TAPE	72	For Remove Protect Sheet
8	99-3100075	30g加厚複合紙5碼乾燥劑73*95mm(萬科JK0030)	2	
7	50-0700021	防鏽劑(保護容積25L)	3	
6	50-0100096	CARTON INTERNAL	1	
5	50-0510041	摺口袋450*380*700mm	1	抗靜電
4		ED050SU3	72	
3	50E0210202	EPE CUSHION SHEET	12	抗靜電
2	50E0310272	PS TRAY	13	抗靜電
1	50-0300491	EPE FOAM	2	

MTL.SPEC.	UNSPECIFIED TOL'S ANGLE ROUGHNESS	REMARK	元太科技股份有限公司 E Ink Holdings Inc.

APPROVE	Patrick Lin	2010/03/29	SCALE 1:1	UNIT mm	SHEET 1 OF 1	DWG.TITLE ED050SU3 PACKING DRAW
CHECK	Patrick Lin	2010/03/29				
DESIGN	Polly Huang	2010/03/29	MTL.NO.		DWG.NO.	REV. A4 SIZE

The information contained herein is the exclusive property of E Ink Holdings Inc. and shall not be distributed, reproduced, or disclosed in whole or in part without prior written permission of E Ink Holdings In c.